PROPRIETARY
THIS DRAWING CONTAINS CONFIDENTIAL INFORMATION. PROPRIETARY TO GMW INC. IT MUST NOT BE REPRODUCED OR DISCLOSED TO OTHERS OR USED IN ANY OTHER WAY, IN WHOLE OR IN PART EXCEPT AS AUTHORIZED IN WRITING BY GMW INC.

REVISIONS

REV	DESCRIPTION	DRAFT	DATE	APPROVED
A	RELEASE		09/22/00	G.DOUGLAS
B	CHANGE HALL SENSOR DEPTH TO 1.5mm		10/18/00	G.DOUGLAS
C	ADD ITEM 7		07/25/00	G.DOUGLAS

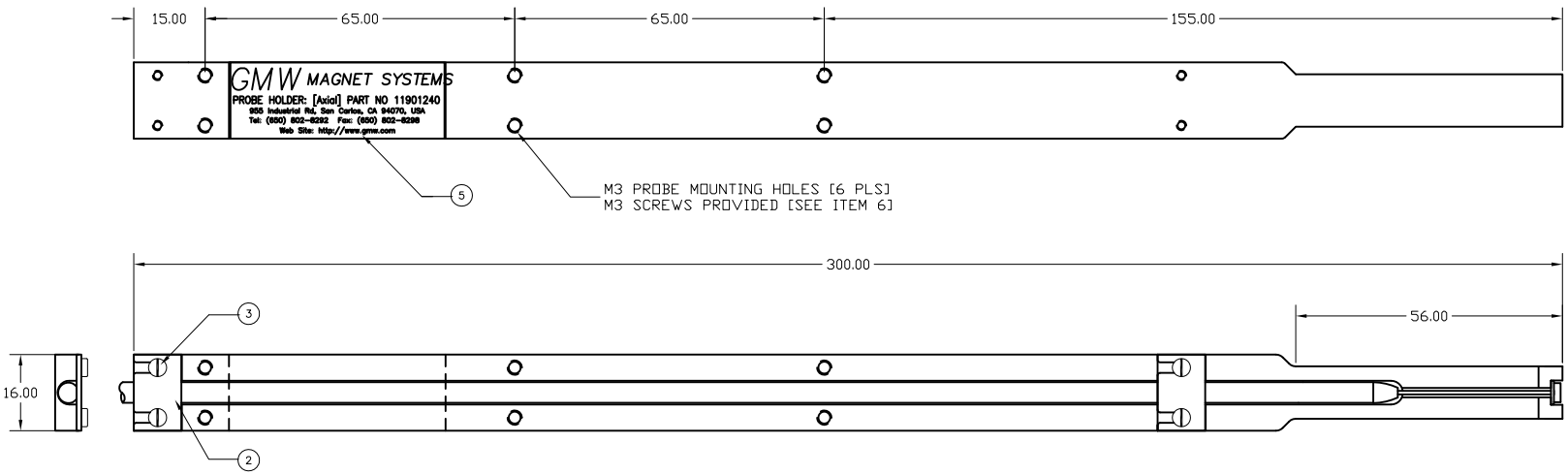

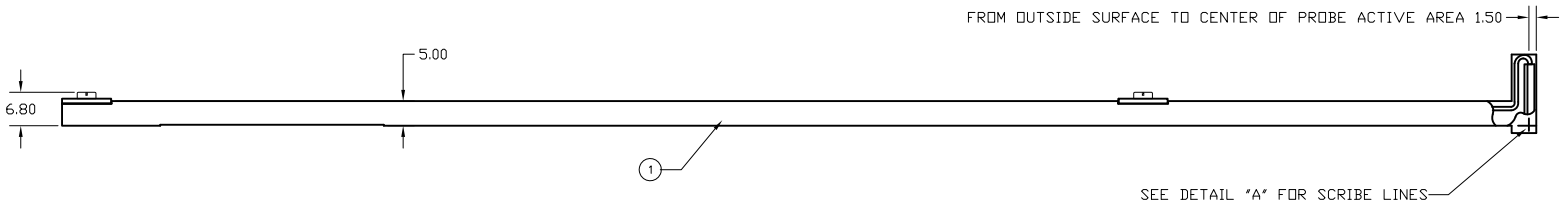

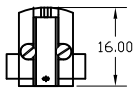

SEE DETAIL "B"
FOR LARGER VIEW

DETAIL "A"

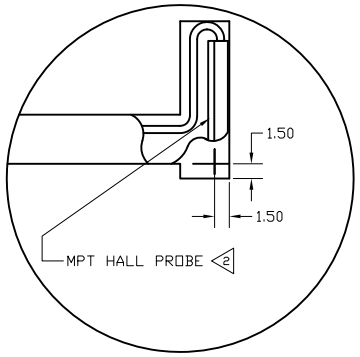

SCALE 2:1

DETAIL "B"

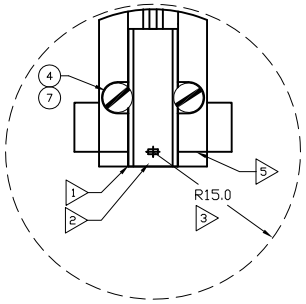

SCALE 2:1

NOTE:

1. PROBE HEAD MOUNTS FLUSH WITH END OF PROBE HOLDER
2. MPT HALL PROBE SHOWN. SEPARATE ORDER ITEM.
3. PROBE HAS CLEARANCE TO MOVE ALONG THE LONGITUDINAL AXIS WITHIN A 15.0mm RADIUS CIRCLE WITH THE ACTIVE AREA ON THE AXIS CENTERLINE
4. INTERSECTION OF VERTICAL AND HORIZONTAL SCRIBE LINES ON SIDE OF PROBE HOLDER INDICATE CENTER OF PROBE ACTIVE AREA.
5. SCRIBE LINE ON FRONT OF PROBE HOLDER ALIGNS WITH CENTER LINE OF PROBE ACTIVE AREA.

N/S = PART NOT SHOWN ON DRAWING

ITEM	QTY	PART NUMBER	DESCRIPTION	NOTE
7	2	U-WNA-0N	WASHER, SIZE 0 NYLON	
6	4	MMN-3-12	SCREW, M3 X 12 CHEESE HD NYLON	N/S
5	1	10900300	LABEL, IDENTIFICATION	
4	2	TBA-18	SCREW, M1.6 X 2 CHEESE HD NYLON	
3	4	MMN-2-4	SCREW, M2 X 4 CHEESE HD NYLON	
2	2	17901860	CABLE CLAMP	
1	1	17901840	STEM	

PARTS LIST

DRAWN G.DOUGLAS DATE 09/22/00
CHECK DATE
ENGINEERING DATE
NEXT ASSY MPT-141 SYSTEM
SOFTWARE AUTOCAD 2000

DO NOT SCALE FROM DRAWING
DIMENSIONS & TOLERANCES (UNLESS OTHERWISE SPECIFIED)

LINEAR	INCHES	mm
X.XXX	±.005	±0.03
X.XX	±.01	±0.1
X.X	±.03	±0.3
X	±.06	±1
DEG.	±.5	±0.5
FINISH	63	1.6

THIRD ANGLE PROJECTION

GMW
955 Industrial Rd, San Carlos, CA 94070
Tel: (650)802-8292. Fax: (650)802-8298.

TITLE
MPT PROBE HOLDER
AXIAL

SIZE A1 | DRAWING NO. 11901240 | REV C
SCALE 2:1 | WT kg | SHEET 1 OF 1